Rev	Revision note	Created by	Checked by	Approved by	Date
0	Released	PUNTUSHATU	LNCMCCUMMA	CLTWATERMA	2024-01-05
2	POWP118083 - Item 5 Door Radius 5 1/2" updated to 5 3/4"	PUNTUSHATU	LNCMCCUMMA	CLTWATERMA	2024-10-14

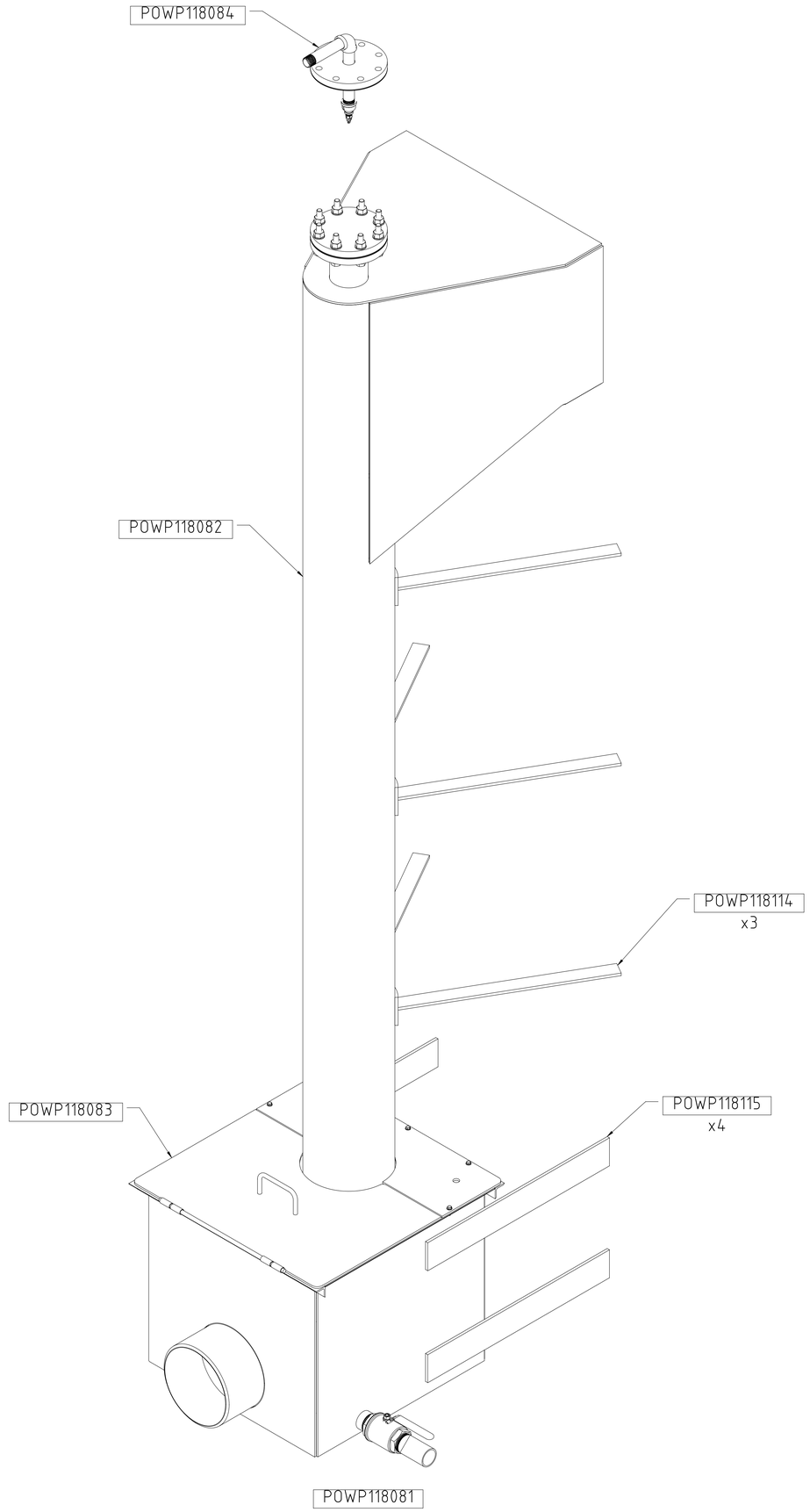

NOTES:
1. NO PAINT REQUIRED.
2. ELECTRONIC FLAT PATTERNS AVAILABLE.
3. MARK EACH ASSEMBLY WITH ITEM ID PRIOR TO SHIPPING.

No	Item ID	Description	Doc. Id	Material	Size	Weight	Qty	Ship Loose
5	POWP118084	Spray Nozzle Assy.	MF00646923			19	1	X
4	POWP118115	Plate	MF00643632	AISI 304L	3/8" x 4" x 30"	13	4	X
3	POWP118114	Pipe Standoff Assy.	MF00643632			15	3	X
2	POWP118083	Lower Box Assy.	MF00643632			393	1	X
1	POWP118082	Overflow Assy. Upper	MF00643632			651	1	X

Projection method	General tolerances	Welding symbols	Assembly Doc	Weight	Volume
				1161 lb	

Valmet
This document is the exclusive intellectual property of Valmet Corporation and/or its subsidiaries and is furnished solely for operating and maintaining the specific project. Re-use of the document for any other project or purpose is prohibited. The document or the information shall not be reproduced, copied or disclosed to a third party without prior written consent of the company.

Size: E
Scale: 1:6

MANUFACTURING PER USSTANDARD-00819
TOLERANCES UNLESS OTHERWISE SPECIFIED
0" TO 2'-0" +/-1/16" X.X" +/-0.1"
2'-0" TO 4'-0" +/-1/8" X.XX" +/-0.03"
4'-0" TO 7'-0" +/-3/16" X.XXX" +/-0.015"
OVER 7'-0" +/-1/4"
ANGLES GENERAL PLATEWORK +/-1/2°
TUBE SHIELDS +/- 1°

Proj. no: SDD
Proj. name: Standard Drawings
Item ID: POWP118081
Title: FABRICATION DETAILS - DISSOLVING TANK OVERFLOW PIPE
Code: Info Recovery Boiler
Doc. id: MF00643632
Sheet: 1/4
Revision: 2
Status: Certified for Fabrication

C:\ENG_Vault\Libraries\Product Libraries\SDD\Product\SD-SUP-TOP\Standard\1-10.7.1996

Rev	Revision note	Created by	Checked by	Approved by	Date
0	Released	PUNTUSHATU	LNCMCCUMMA	CLTWATERMA	2024-01-05
2	POWP118083 - Item 5 Door Radius 5 1/2" updated to 5 3/4"	PUNTUSHATU	LNCMCCUMMA	CLTWATERMA	2024-10-14

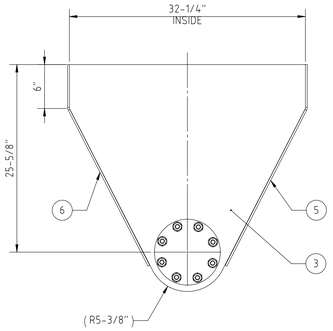

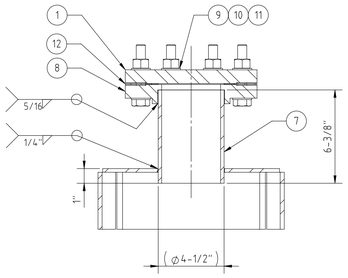

SECTION A-A
SCALE 1 : 4

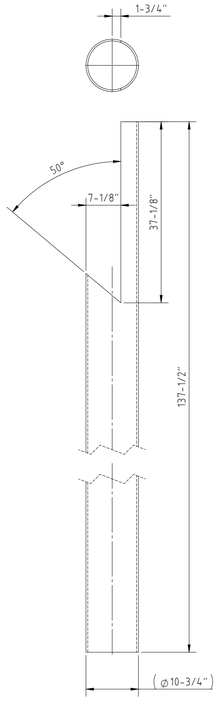

DETAIL ITEM 2

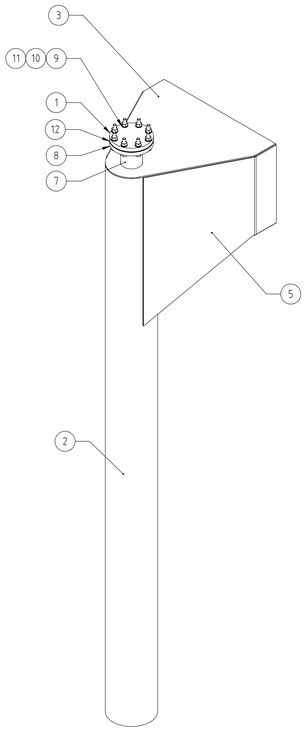

POWP118082

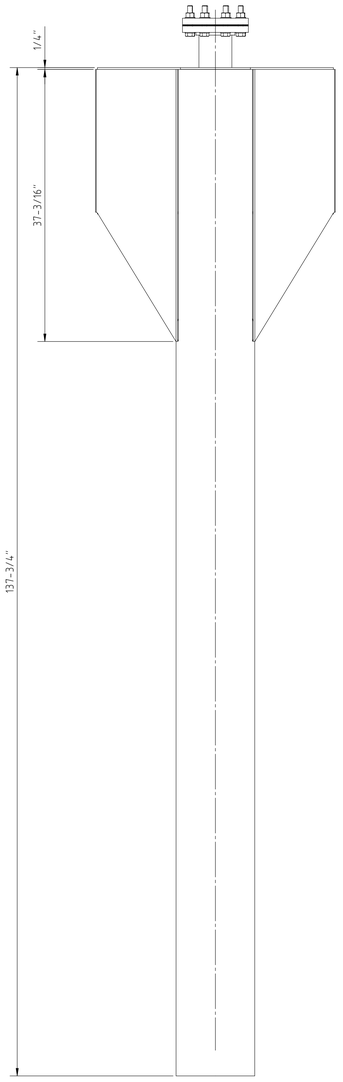

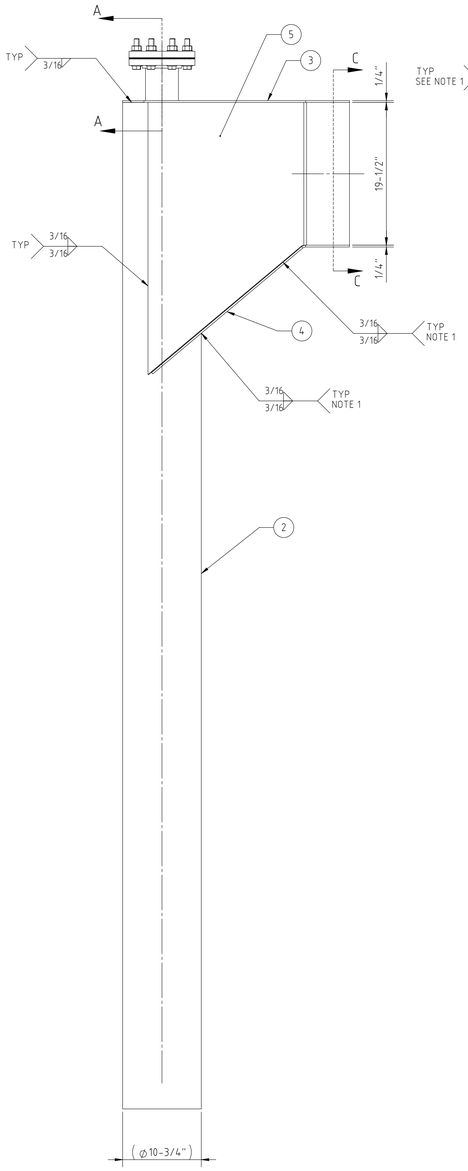

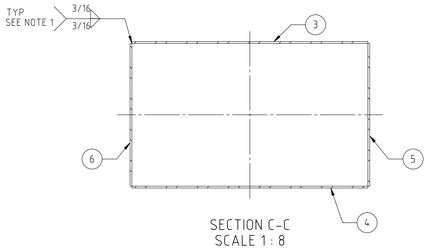

SECTION C-C
SCALE 1 : 8

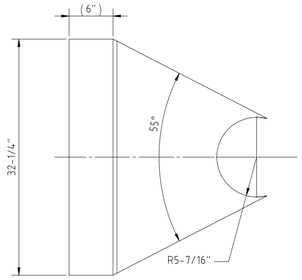

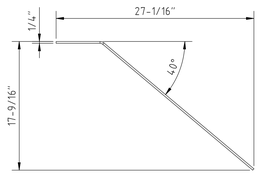

DETAIL ITEM 4

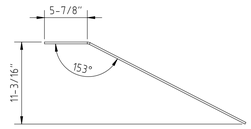

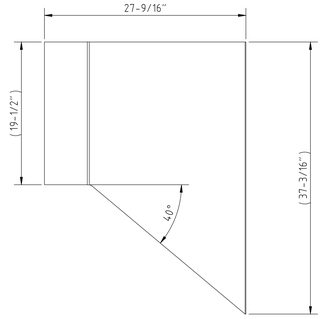

DETAIL ITEM 5 OR 6

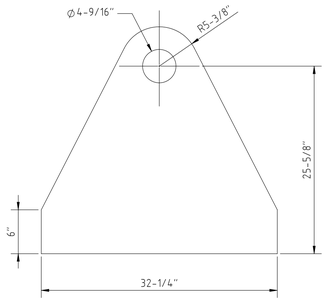

DETAIL ITEM 3

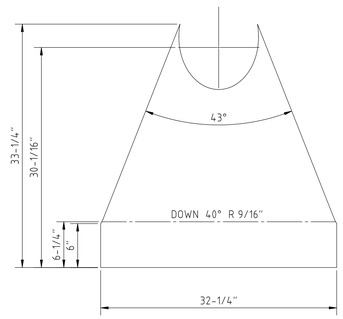

DEVELOPMENT ITEM 4

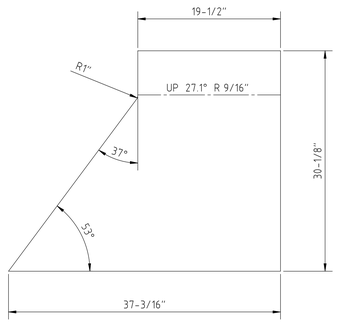

DEVELOPMENT
ITEM 5 SHOWN
ITEM 6 BEND OPPOSITE HAND

NOTES:

1. ENSURE INTERNAL SLOPE, WHERE ITEM 4 WELDS TO ITEM 2, IS FLUSH. NO LEDGES TO REMAIN. GRIND SMOOTH AS NEEDED.

No	Description	Doc. Id.	Material	Item ID	Size	Weight	Qty	Ship Loose
12	Gasket	-	PTFE		1/16" x 4 1/2" I.D. x 9" O.D.	0.10	1	
11	Nut	-	AISI 304L	-	5/8"-11 UNC	0.134	8	
10	Bolt		AISI 304L		5/8"-11 UNC x 3 1/2" LG.	0.0571	8	
9	Washer		AISI 304L		Ø5/8"	0.01	16	
8	Flange		AISI 304L		SW 4" ASME B16.5, CLASS 150	12.31	1	
7	Pipe		AISI 304L		4" SCH 40S (.237) x 6 3/8" LG.	6	1	
6	Plate		AISI 304L		1/4" x 37 3/16" X 30 1/8"	57.569	1	
5	Plate	-	AISI 304L	-	1/4" x 37 3/16" X 30 1/8"	57.569	1	
4	Plate		AISI 304L		1/4" X 33 1/4" X 32 1/4"	50.181	1	
3	Plate		AISI 304L		1/4" X 31" X 32"	47.595	1	
2	Pipe		AISI 304L		10" SCH 40S (.375) X 11' 5 1/2"	402.782	1	
1	Blind Flange		AISI 304L		4" ASME B16.5, CLASS 150	15.74	1	

Projection method	General tolerances	Welding symbols	Assembly Doc	Weight	Volume
				1161 lb	

This document is the exclusive intellectual property of Valmet Corporation and/or its subsidiaries and is furnished solely for operating and maintaining the specific project. Re-use of the document for any other project or purpose is prohibited. The document or the information shall not be reproduced, copied or disclosed to a third party without prior written consent of the company.

Size: E
Scale: 1:12

MANUFACTURING PER USSTANDARD-00819
TOLERANCES UNLESS OTHERWISE SPECIFIED
0" TO 2'-0" +/-1/16" X.X" +/-0.1"
2'-0" TO 4'-0" +/-1/8" X.XX" +/-0.03"
4'-0" TO 7'-0" +/-3/16" X.XXX" +/-0.015"
OVER 7'-0" +/-1/4"
ANGLES GENERAL PLATEWORK +/-1/2°
TUBE SHIELDS +/- 1°

Valmet

Proj. no: SDD
Proj. name: Standard Drawings
Item ID: POWP118081
Title: FABRICATION DETAILS - DISSOLVING TANK OVERFLOW PIPE
Code: Info Recovery Boiler
Doc. id.: MF00643632
Sheet: 2/4
Revision: 2
Status: Certified for Fabrication

Rev	Revision note	Created by	Checked by	Approved by	Date
0	Released	PUNTUSHATU	LNEMCCUMMA	CLTWATERMA	2024-01-05
2	POWP118083 - Item 5 Door Radius 5 1/2" updated to 5 3/4"	PUNTUSHATU	LNEMCCUMMA	CLTWATERMA	2024-10-14

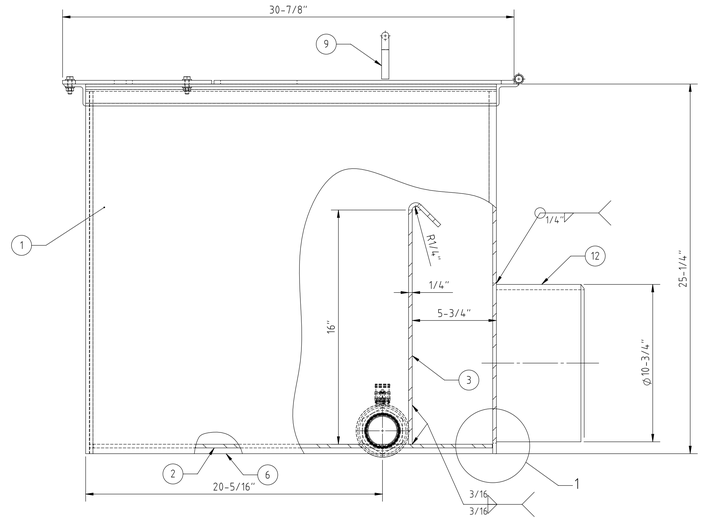

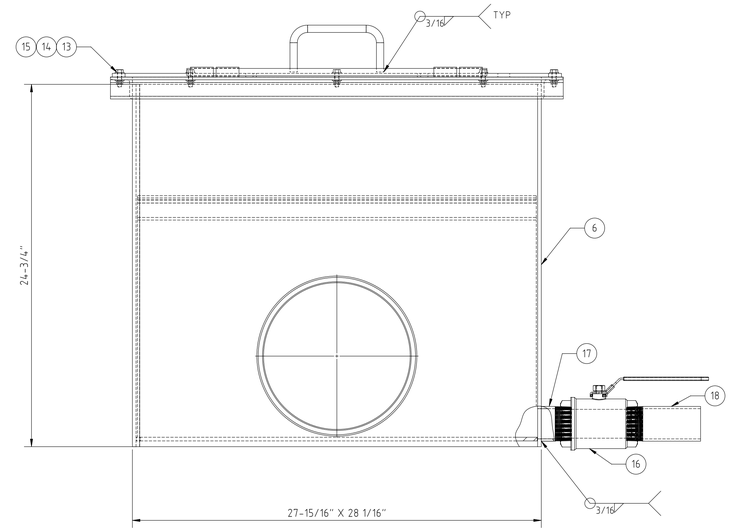

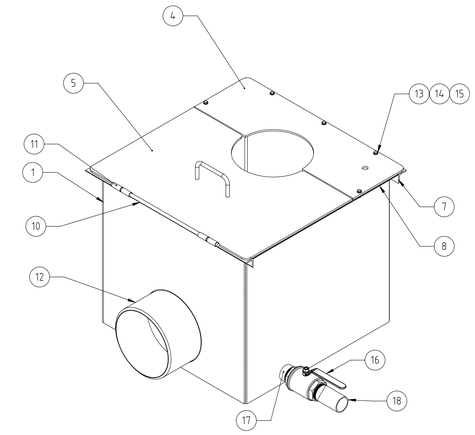

POWP118083

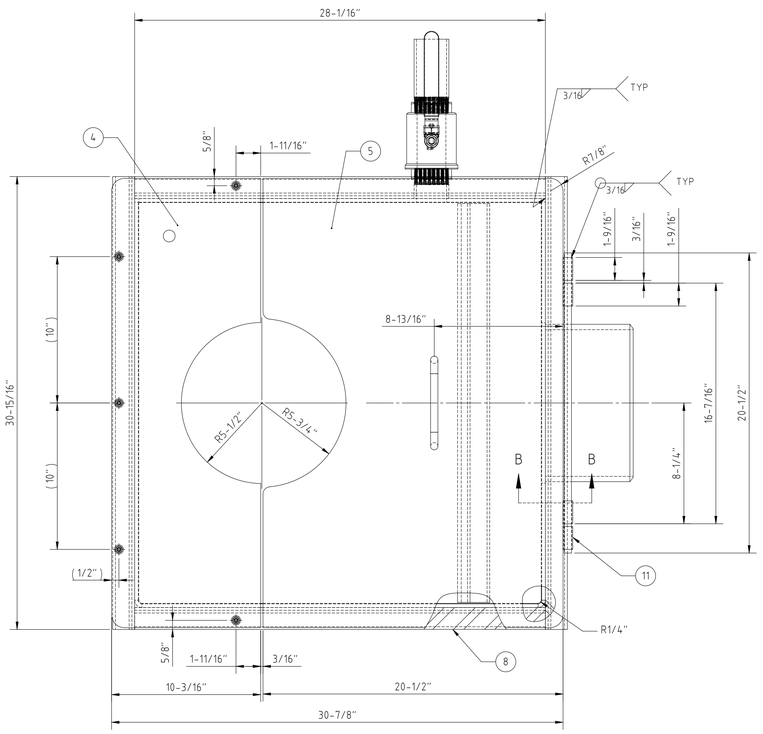

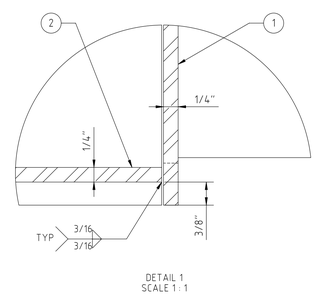

DETAIL 1
SCALE 1 : 1

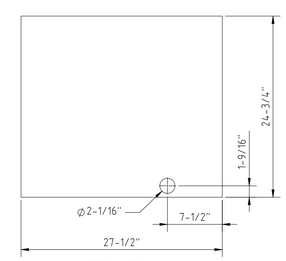

DETAIL ITEM 6

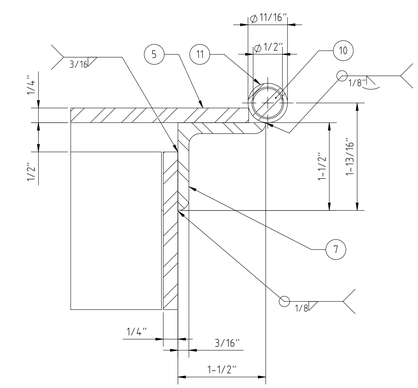

SECTION B-B
SCALE 1 : 1

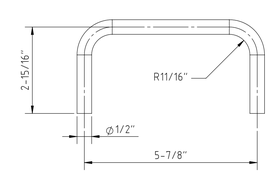

DETAIL ITEM 9

NOTE:
1. POWP118116 FOR GASKET SPARE PARTS REPLACEMENTS.

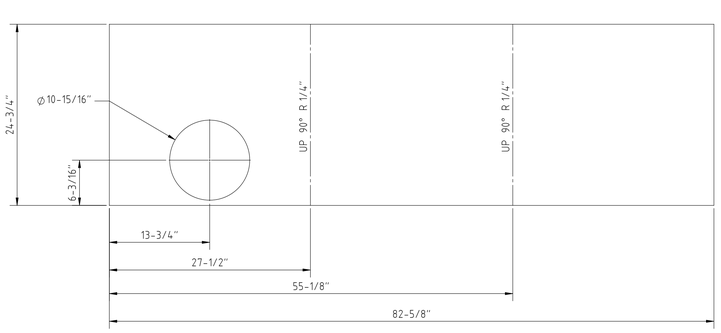

DEVELOPMENT ITEM 1

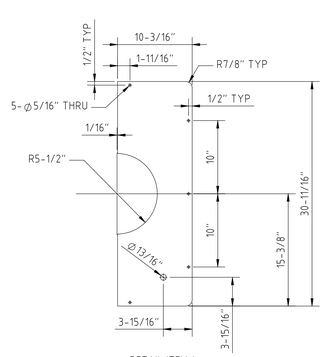

DETAIL ITEM 4

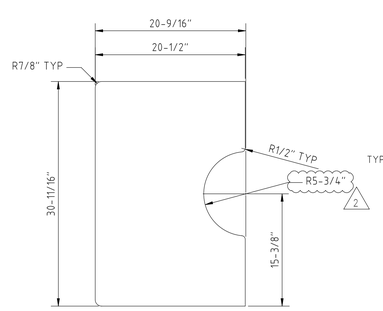

DETAIL ITEM 5

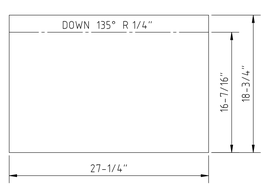

DEVELOPMENT ITEM 3

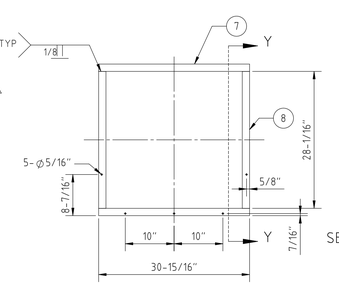

DETAIL ITEM 7 & 8

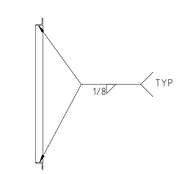

SECTION Y-Y

No	Description	Doc. id	Material	Item ID	Size	Weight	Qty	Ship loose
18	Pipe Nipple	-	AISI 304L		2" NPT x 5" LG.	1.46	1	
17	Pipe Nipple	-	AISI 304L		2" NPT x 2" LG.	0.525	1	
16	Threaded Ball Valve	-	AISI 316L		2" NPT Threaded Ball Valve	8.35	1	
15	Nut		AISI 304L		1/4"-20UNC	0.008	5	
14	Bolt		AISI 304L		1/4"-20UNC x 1 3/16" LG.	0.0227	5	
13	Washer		AISI 304L		Ø1/4"	0.001	10	
12	Pipe		AISI 304L		10" SCH 40S (.365) X 6" LG.	20.333	1	
11	Tube		AISI 304L		Ø0.675 X 1/16" THK X 1 9/16" LG.	0.056	4	
10	Round Bar		AISI 304L		Ø1/2" X 20 1/2" LG.	1.163	1	
9	Round Bar		AISI 304L		Ø1/2" X 10" LG.	0.624	1	
8	Angle		AISI 304L		1 1/2" x 1 1/2" x 28 1/16"		2	
7	Angle		AISI 304L		1 1/2" x 1 1/2" x 30 15/16"	17.71	2	
6	Plate		AISI 304L		1/4" X 24 3/4" X 27 1/2"	48.936	1	
5	Plate		AISI 304L		1/4" X 20 1/2" X 30 11/16"	41.74	1	
4	Plate		AISI 304L		1/4" X 10 3/16" X 30 11/16"	19.13	1	
3	Plate		AISI 304L		1/4" X 18 3/4" X 27 1/4"	36.977	1	
2	Plate		AISI 304L		1/4" X 27 1/8" X 27 1/2"	54.392	1	
1	Plate		AISI 304L		1/4" X 24 3/4" X 82 5/8"	140.952	1	

Projection method	General tolerances	Welding symbols	Assembly Doc	Weight	Volume
				1161 lb	

Valmet
This document is the exclusive intellectual property of Valmet Corporation and/or its subsidiaries and is furnished solely for operating and maintaining the specific project. Re-use of the document for any other project or purpose is prohibited. The document or the information shall not be reproduced, copied or disclosed to a third party without prior written consent of the company.

Size: E
Scale: 1:12

MANUFACTURING PER USSTANDARD-00819
TOLERANCES UNLESS OTHERWISE SPECIFIED
0" TO 2'-0" +/-1/16" X.X" +/-0.1"
2'-0" TO 4'-0" +/-1/8" X.XX" +/-0.03"
4'-0" TO 7'-0" +/-3/16" X.XXX" +/-0.015"
OVER 7'-0" +/-1/4"
ANGLES GENERAL PLATEWORK +/-1/2"
TUBE SHIELDS +/- 1°

Proj. no	Proj. name	Item ID
SDD	Standard Drawings	POWP118081

Title: FABRICATION DETAILS - DISSOLVING TANK OVERFLOW PIPE

Code	Info	Doc. id	Sheet	Revision
	Recovery Boiler	MF00643632	3/4	2
Status: Certified for Fabrication				

Rev	Revision note	Created by	Checked by	Approved by	Date
0	Released	PUNTUSHATU	LNEMCCUMMA	CLTWATERMA	2024-01-05
2	POWP118083 - Item 5 Door Radius 5 1/2" updated to 5 3/4"	PUNTUSHATU	LNEMCCUMMA	CLTWATERMA	2024-10-14

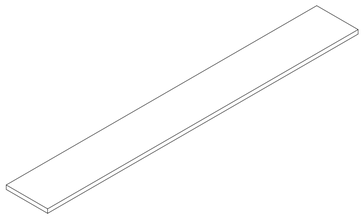

POWP118115

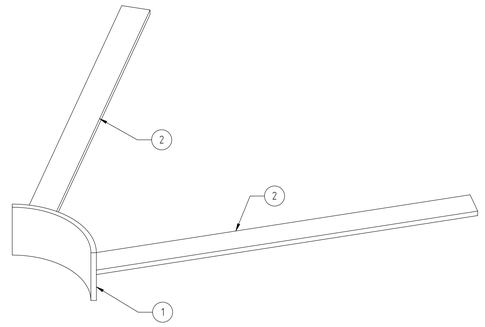

POWP118114

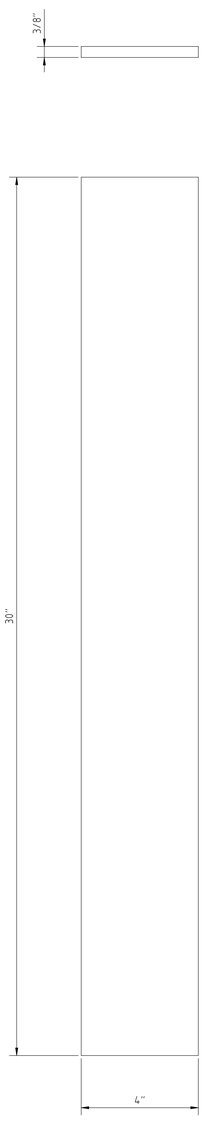

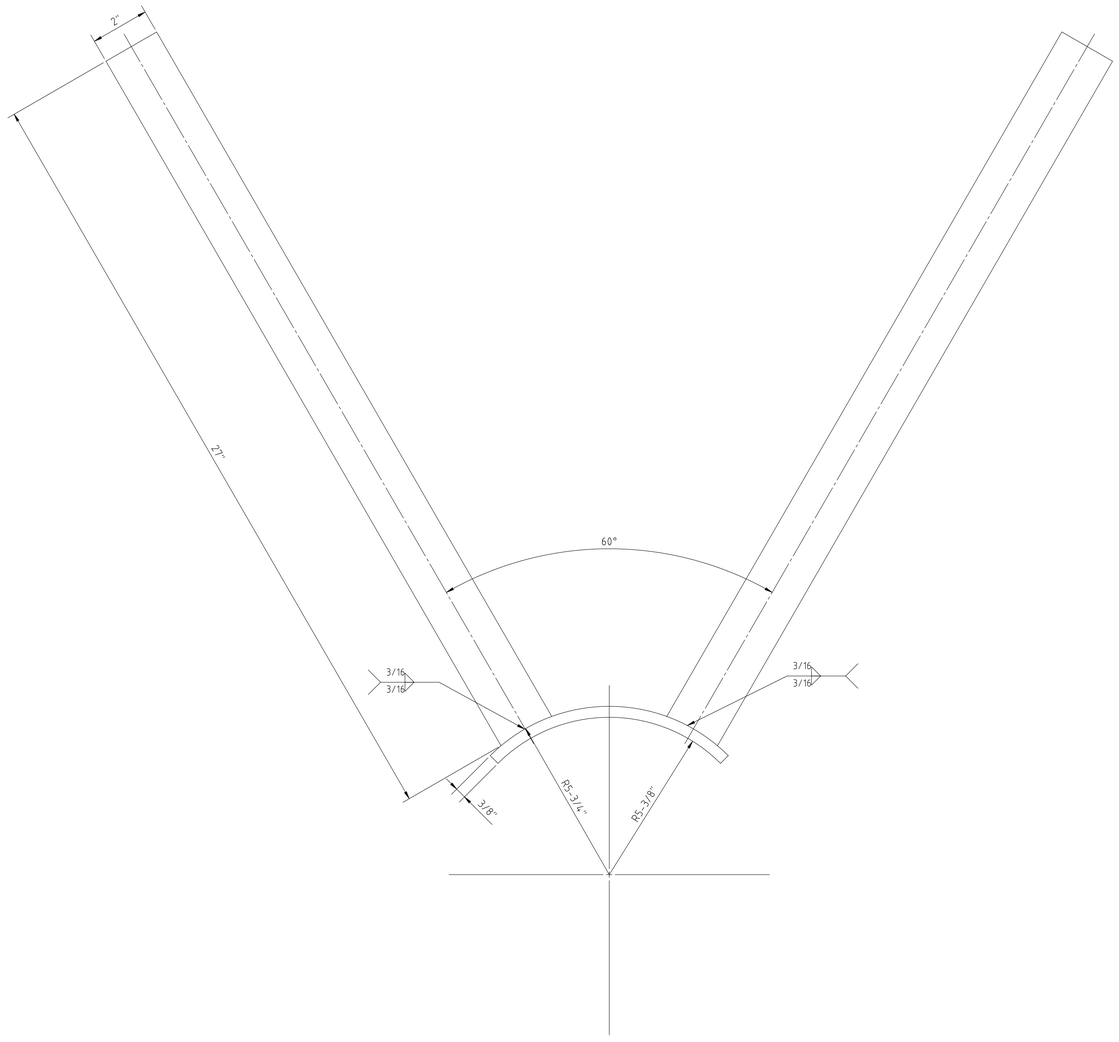

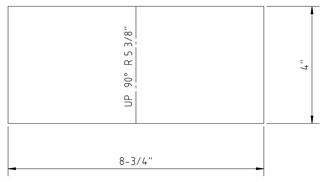

DEVELOPMENT ITEM 1

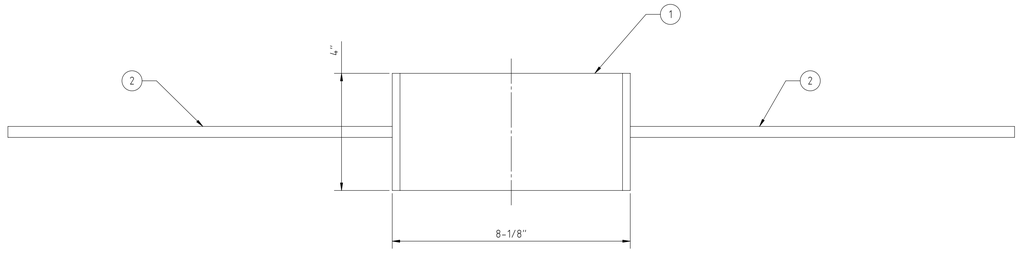

No	Description	Doc. Id	Material	Item ID	Size	Weight	Qty	Ship Loose
1	Plate	MF00643632	AISI 304L	POWP118115	3/8" x 4" x 30"	13	4	X

No	Description	Doc. Id	Material	Item ID	Size	Weight	Qty	Ship Loose
2	Plate		AISI 304L		3/8" X 2" X 26"	5.839	6	
1	Plate		AISI 304L		3/8" X 4" X 8 3/4"	3.788	3	

Projection method: General tolerances | Welding symbols | Assembly Doc | Weight: 1161 lb | Volume

Valmet

This document is the exclusive intellectual property of Valmet Corporation and/or its subsidiaries and is furnished solely for operating and maintaining the specific project. Re-use of the document for any other project or purpose is prohibited. The document or the information shall not be reproduced, copied or disclosed to a third party without prior written consent of the company.

Size: E | Scale: 1:2

MANUFACTURING PER USSTANDARD-00819
TOLERANCES UNLESS OTHERWISE SPECIFIED
0" TO 2'-0" +/-1/16" X.X" +/-0.1"
2'-0" TO 4'-0" +/-1/8" X.XX" +/-0.03"
4'-0" TO 7'-0" +/-3/16" X.XXX" +/-0.015"
OVER 7'-0" +/-1/4"
ANGLES GENERAL PLATEWORK +/-1/2°
TUBE SHIELDS +/- 1°

Proj. no: SDD | Proj. name: Standard Drawings | Item ID: POWP118081

Title: FABRICATION DETAILS - DISSOLVING TANK OVERFLOW PIPE

Code | Info: Recovery Boiler | Doc. id: MF00643632 | Sheet: 4/4 | Revision: 2

Status: Certified for Fabrication